Lamp Type: GPH420T5LCA/HO/CB-098

Spec Number: 3203

Engineering Specification Sheet

Lamp Diagram:

R-Can Lamp with 098 base

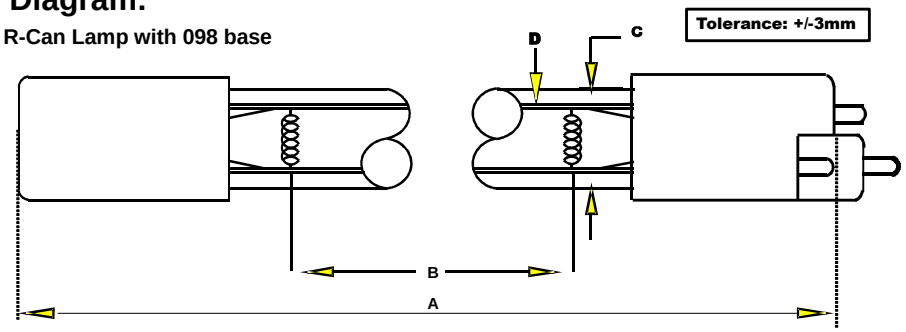

Left Base Diagram:

A08-PP-C00 HD No Hole Base Black

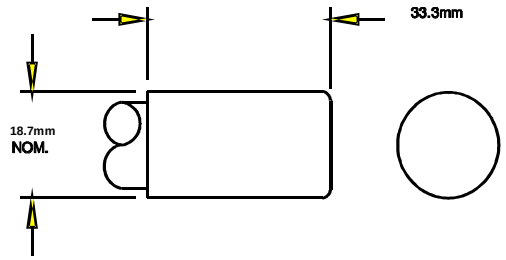

Right Base Diagram:

08-CB-098 R-Can Base
08-PC-098 R-Can Base with Vendor Supplied Pin

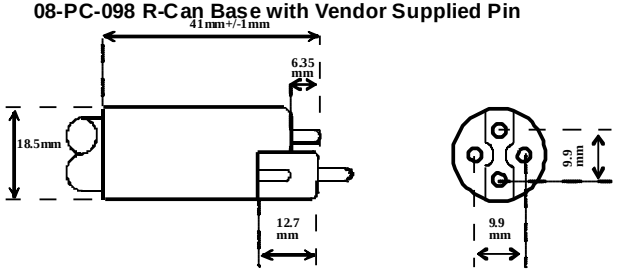

Pin: 08-PN-006

Lamp Characteristics

(A) Base Face:	420	mm	+/- 3		
(B) ARC:	338mm			Operating Current	750mA
(C) Bulb Diameter	15			Lamp Voltage	54V
(X)				Lamp Wattage	39W
Glass Type:	L (Non-Ozone)	Coating:	A11-QC-001		
If Spliced:	**L**	mm	**VH**		mm
	(Y)				

UV Output - Certified to be true. Kenneth A. Ell, President

Output UVC Watts	micro/watt	/cm^2 @ 1 Meter	Rated Life (hrs)	% Output @EOL	Output Notes Field	Ballast Used for Measurements
15		130	12000	80.00%		PSP2GPH40/HO

212 Ideal Way
Poultney, VT 05764 USA
Phone-(802) 287-4195 Fax-(802) 287-4489
www.firstlightusa.com
email: sales@firstlightusa.com

*UV Output is based on lamps measured after 100 hours of operation under lab conditions.
These values are subject to wide variations under application/field conditions.
UV Output is measured at 254 nm
**Rated Life is for reference purposes only and is based on a group of lamps operating under lab conditions. Actual life depends on the operating conditions of the lamp.

7/10/2018
4:02:36 PM

This data includes matters which are trade secrets of First Light Technologies, Inc., or Proprietary or Confidential to First Light Technologies, Inc. and shall not be reproduced or disclosed in whole or part, or used in any manner except in connection with First Light Technologies, Inc. business, without the written permission of First Light Technologies, Inc.