Lamp Type: GPH600T5VHCA/HO/CB-0PN
Replaces RL-600TOC

Spec Number: 4140

Engineering Specification Sheet

Lamp Diagram:

Channel Base Lamp

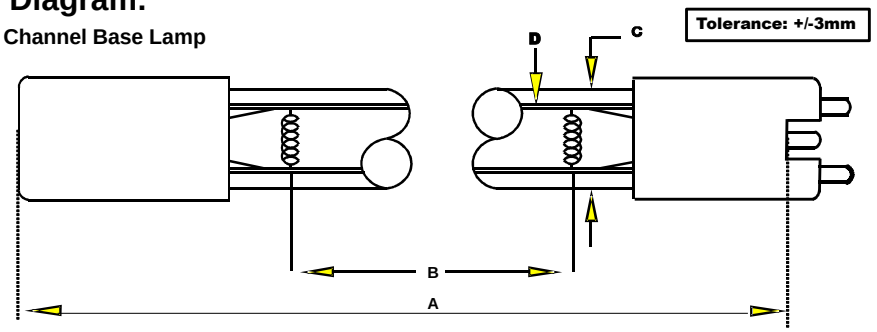

Left Base Diagram:

A08-PP-C00 HD No Hole Base Black

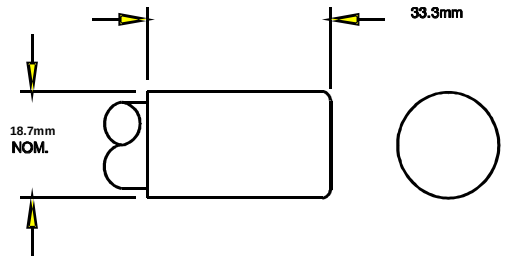

Right Base Diagram:

A08-PN-CC0 PN Base

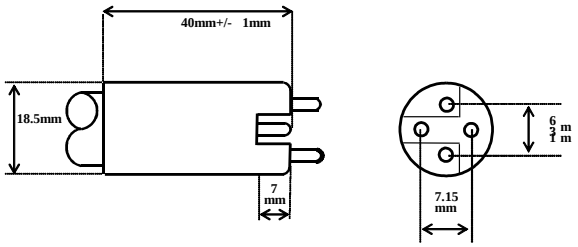

Pin: 08-PN-025

Lamp Characteristics

(A) Base Face: 600 mm +/- 3
(B) ARC: 520
(C) Bulb Diameter 15
(X)
Glass Type: VH (Ozone) Coating: A11-QC-001

If Spliced: **L** mm **VH** mm
(Y)

Operating Current	800ma.
Lamp Voltage	84v
Lamp Wattage	67w

UV Output - Certified to be true. Kenneth A. Ell, President

Output UVC Watts	micro/watt	/cm^2 @ 1 Meter	Rated Life (hrs)	% Output @EOL	Output Notes Field	Ballast Used for Measurements
23		170	12000	80.00%		PSP2GPH40HO

212 Ideal Way
Poultney, VT 05764 USA
Phone-(802) 287-4195 Fax-(802) 287-4489
www.firstlightusa.com
email: sales@firstlightusa.com

*UV Output is based on lamps measured after 100 hours of operation under lab conditions.
These values are subject to wide variations under application/field conditions.
UV Output is measured at 254 nm
**Rated Life is for reference purposes only and is based on a group of lamps operating under lab conditions. Actual life depends on the operating conditions of the lamp.

7/10/2018
3:46:40 PM

This data includes matters which are trade secrets of First Light Technologies, Inc., or Proprietary or Confidential to First Light Technologies, Inc. and shall not be reproduced or disclosed in whole or part, or used in any manner except in connection with First Light Technologies, Inc. business, without the written permission of First Light Technologies, Inc.